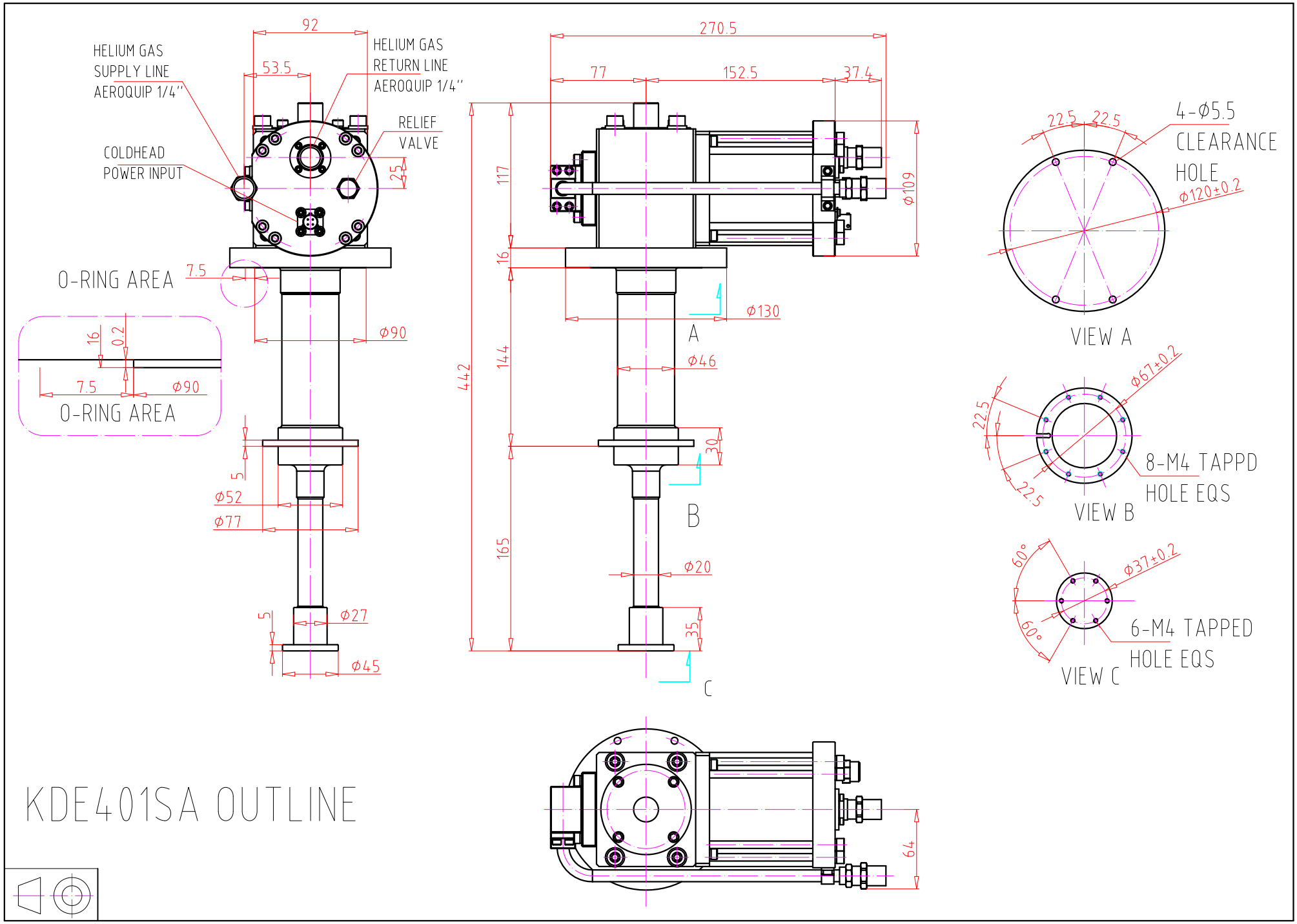
HELIUM GAS
SUPPLY LINE
AEROQUIP 1/4"
HELIUM GAS
RETURN LINE
AEROQUIP 1/4"
RELIEF
VALVE
COLDHEAD
POWER INPUT
92
53.5
25
O-RING AREA
7.5
16
0.2
7.5
Ø90
O-RING AREA
Ø90
5
Ø52
Ø77
5
Ø27
Ø45
270.5
77
152.5
37.4
117
16
144
442
165
Ø109
Ø130
A
Ø46
30
B
Ø20
35
C
64
22.5
22.5
4-Ø5.5
CLEARANCE
HOLE
Ø120±0.2
VIEW A
Ø67±0.2
22.5
22.5
8-M4 TAPPD
HOLE EQS
VIEW B
60°
60°
Ø37±0.2
6-M4 TAPPED
HOLE EQS
VIEW C
KDE401SA OUTLINE