Variable Filter Holder
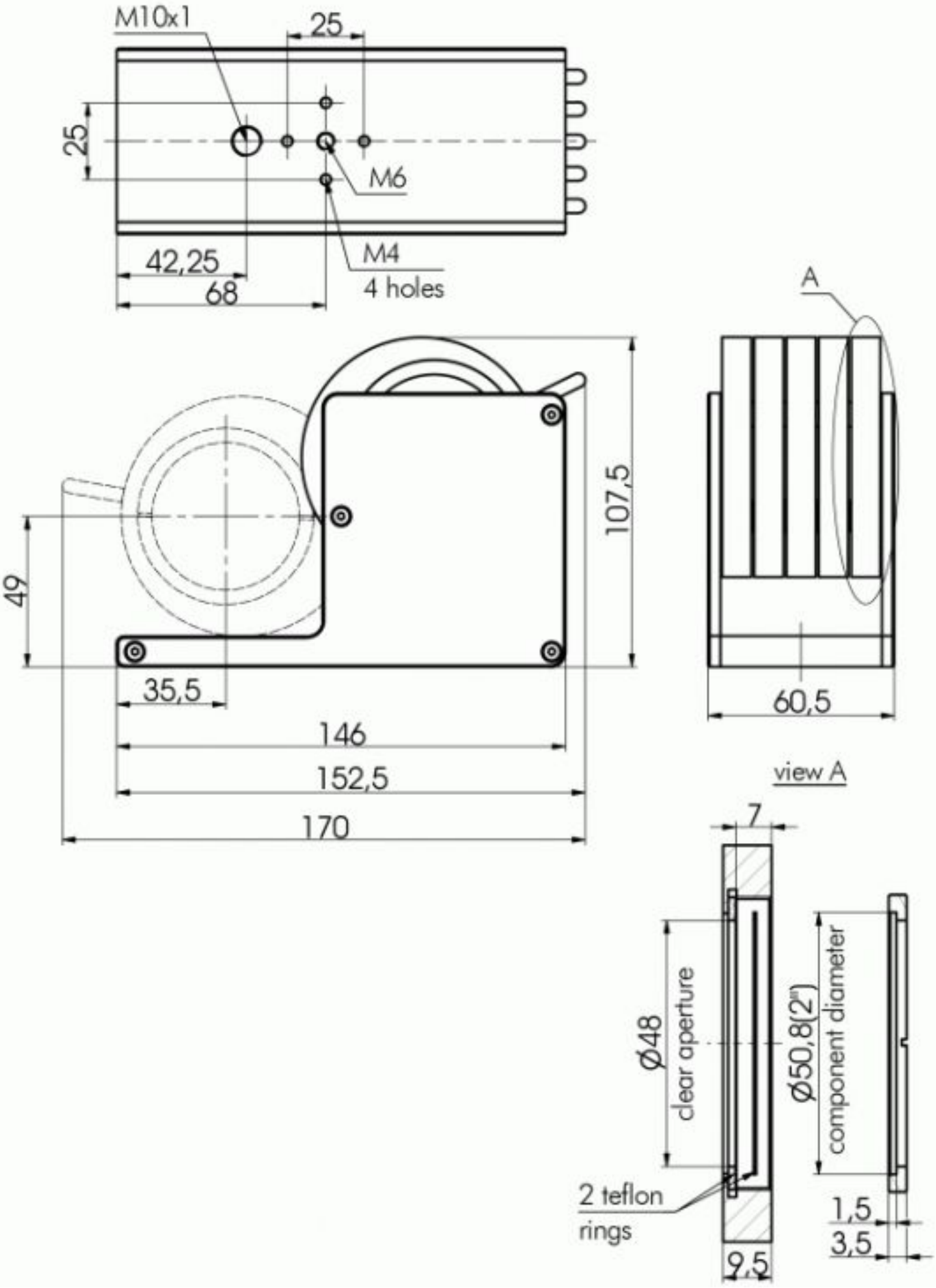
4VFH-5-2