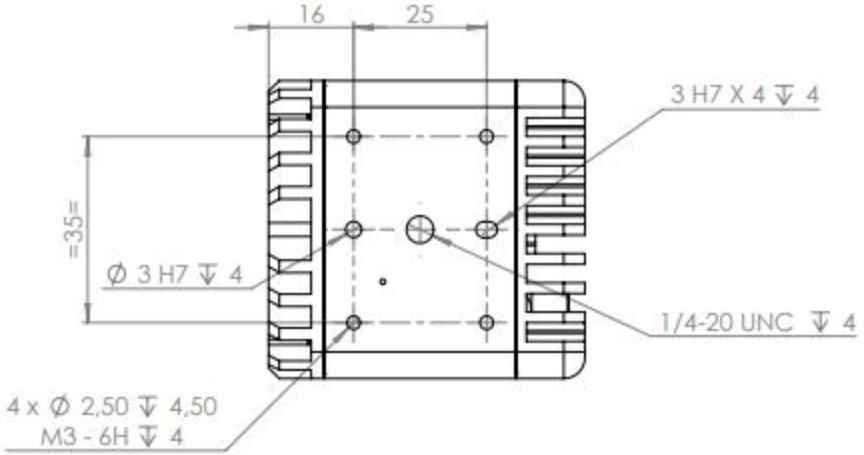


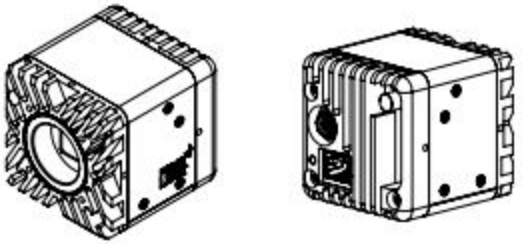

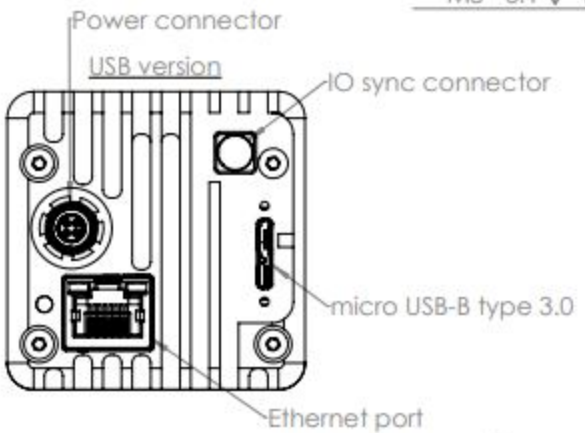


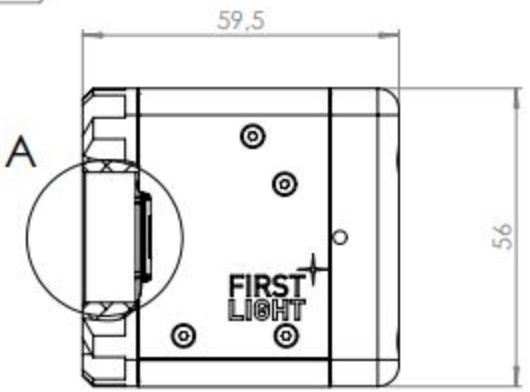


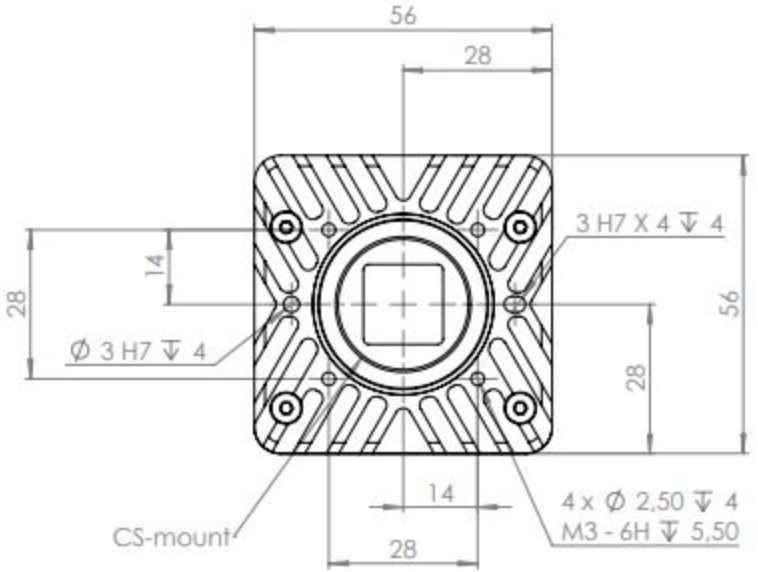


DÉTAIL A
ECHELLE 2 : 1

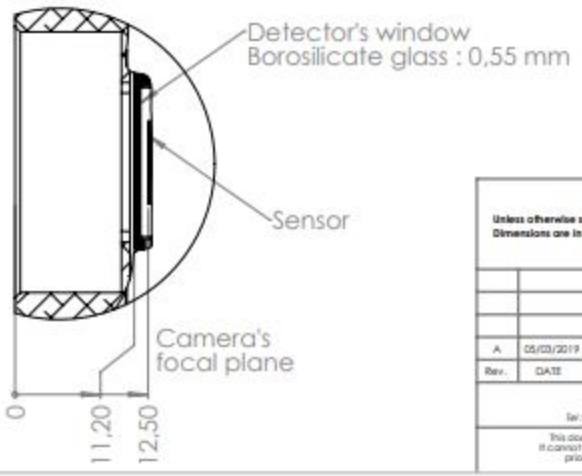


| | | | | | |
|---|---|---|---|---|---|
| Unless otherwise specified : Dimensions are in millimeters | Tolerances : | Surface finish: | | Treatment: | Protection : |
| | Project: C-RED 3 | | | Material: | Weight: 0,00 kg |
| | | | | Title: C-RED 3 | |
| A | 05/03/2019 | First issue | fcl | Group: Interface drawing | |
| Rev. | DATE | Description | Drawn / Checked | | |
| First Light Imaging, 100, route des Houssières, 13850 Meyreuil – France, Tel: +33 (0)4 42 61 29 20 - Fax: +33 (0)4 42 61 29 21 | | | | Draw No. FLI010-310-PE002 | A3 |
| This document is the property of First Light Imaging. It cannot be used, reproduced or disclosed without the prior written permission of First Light Imaging. | | | | Scale: 1:1 | Sheet 1 / 1 |